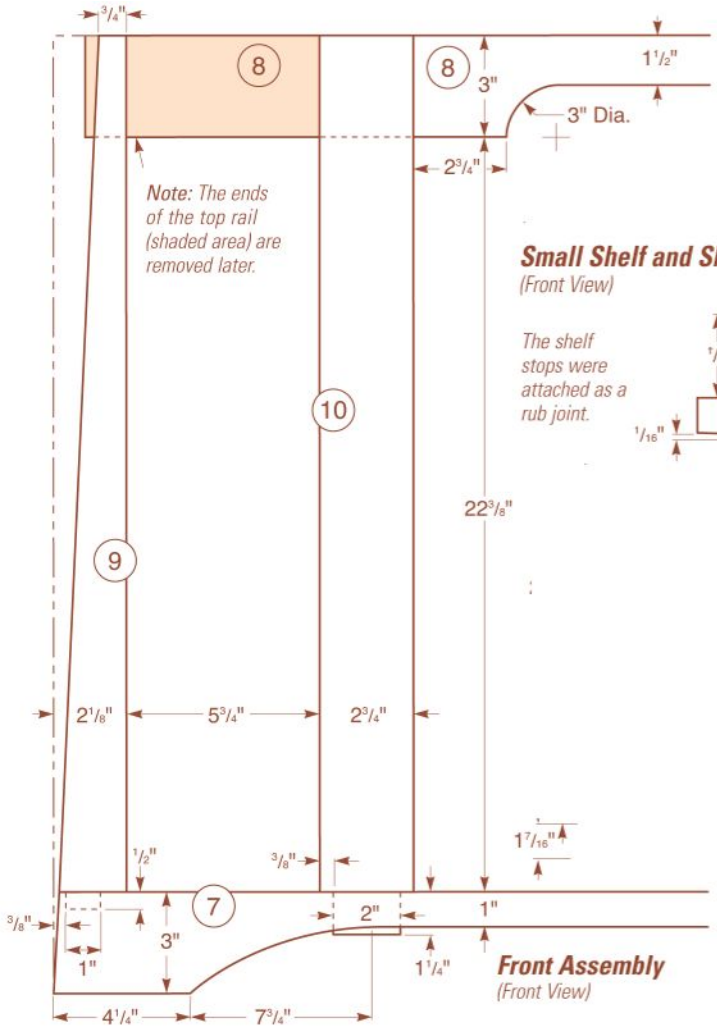

Small Shelf and Shelf Stop
(Front View)

The shelf stops were attached as a rub joint.

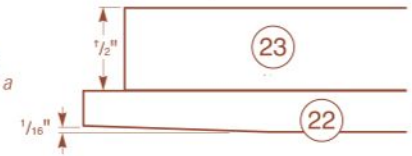

Front Assembly
(Front View)

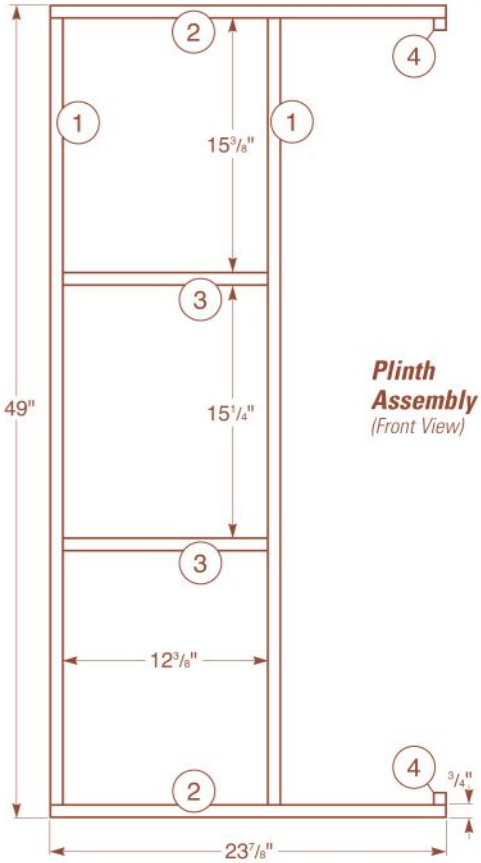

Plinth Assembly
(Front View)

Door Assembly
(Front View)

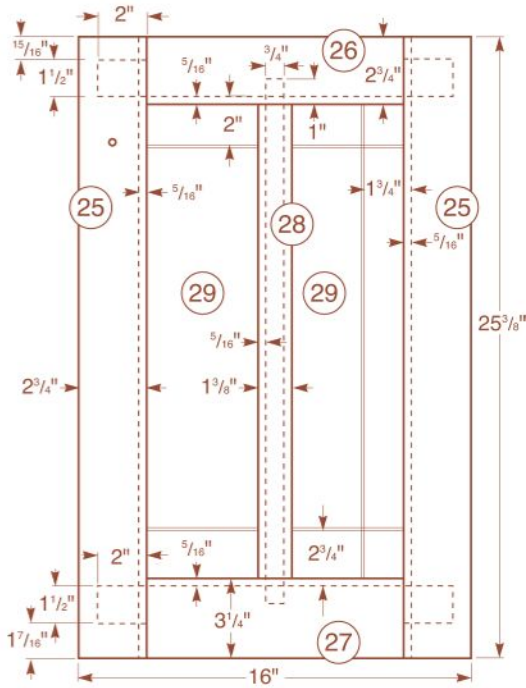

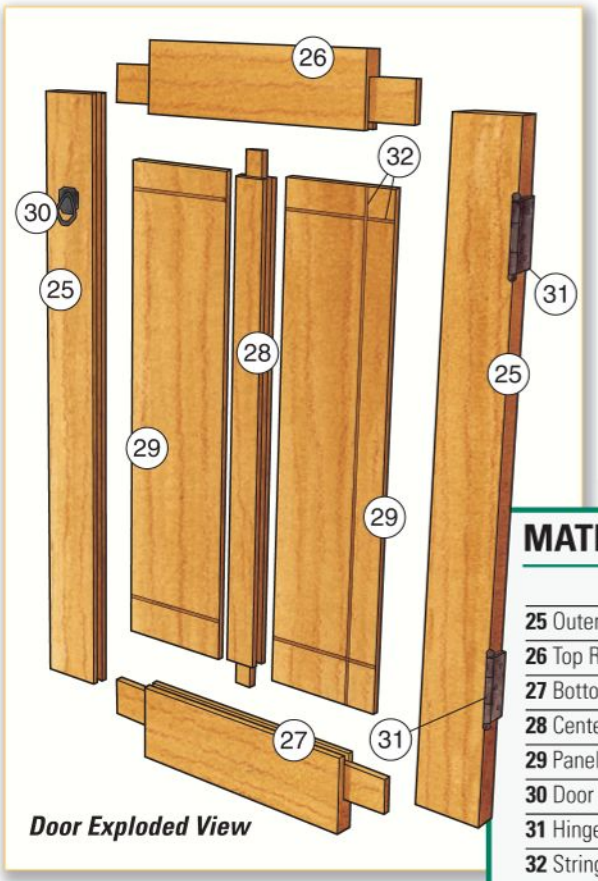

Door Exploded View

MATERIAL LIST (DOORS)

	T x W x L
25 Outer Stiles (4)	3/4" x 2 3/4" x 25 3/8"
26 Top Rails (2)	3/4" x 2 3/4" x 14 1/2"
27 Bottom Rails (2)	3/4" x 3 1/4" x 14 1/2"
28 Center Stiles (2)	3/4" x 1 3/8" x 21 3/8"
29 Panels (4)	3/4" x 5 1/16" x 19 13/16"
30 Door Pulls (2)	Bronze with Back Plate
31 Hinges (4)	1 1/2" x 2 1/2"
32 Stringing	1/4" x 1/4" x 8 lineal ft.